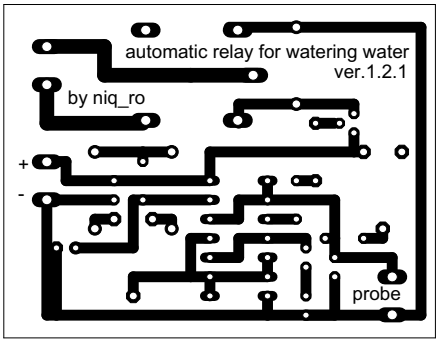

9/17/2012 10:39:03 AM mirrored C:\Program Files\EAGLE-5.4.0\automatic relay for watering flowers ver 1.2.brd