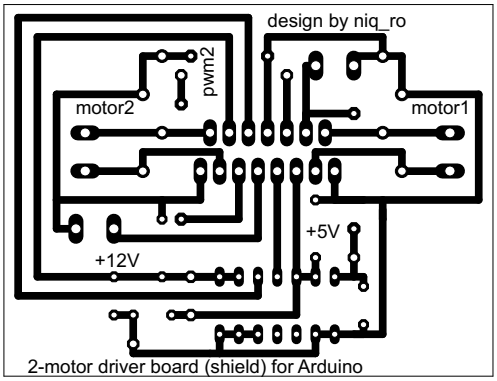

11/20/2012 3:11:36 PM mirrored C:\Program Files\EAGLE-5.4.0\ardumoto.brd