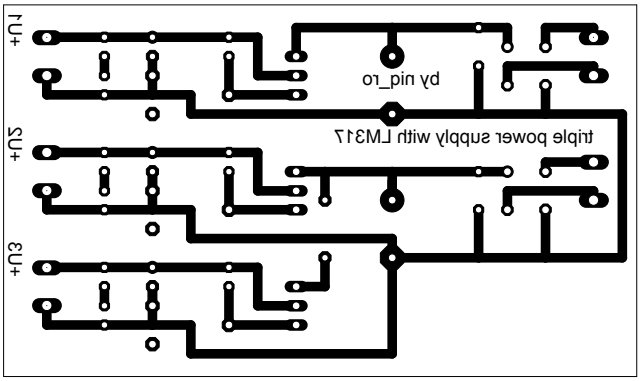
triple power supply with LM317
by mid_ro
+U1
+U2
+U3