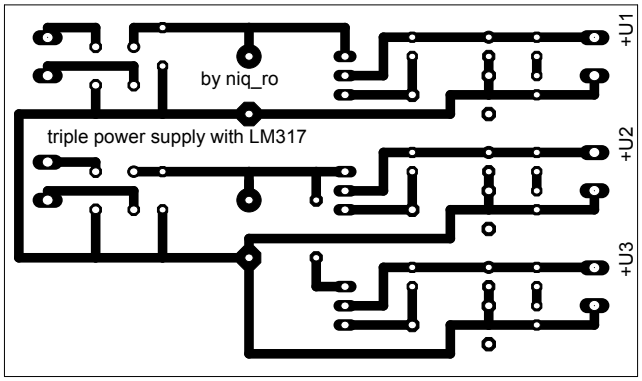

6/25/2010 12:45:48 PM mirrored C:\Program Files\EAGLE-5.4.0\tripleX3.brd