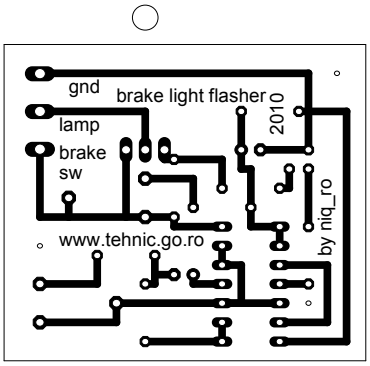


3/31/2010 2:18:25 PM mirrored D:\descarcate_firefox\brakeflashlight\brake_light_flasher.brd